No. of contacts	DIMENSIONS		
	DIM=A	DIM=B	DIM=C
3	2.00	4.10	5.20
4	3.00	5.10	6.20
5	4.00	6.10	7.20
6	5.00	7.10	8.20
7	6.00	8.10	9.20
8	7.00	9.10	10.20
9	8.00	10.10	11.20
10	9.00	11.10	12.20
11	10.00	12.10	13.20
12	11.00	13.10	14.20
13	12.00	14.10	15.20
14	13.00	15.10	16.20
15	14.00	16.10	17.20
16	15.00	17.10	18.20
17	16.00	18.10	19.20
18	17.00	19.10	20.20
19	18.00	20.10	21.20
20	19.00	21.10	22.20
21	20.00	22.10	23.20
22	21.00	23.10	24.20
23	22.00	24.10	25.20
24	23.00	25.10	26.20
25	24.00	26.10	27.20
26	25.00	27.10	28.20
27	26.00	28.10	29.20
28	27.00	29.10	30.20
29	28.00	30.10	31.20
30	29.00	31.10	32.20
31	30.00	32.10	33.20
32	31.00	33.10	34.20
33	32.00	34.10	35.20
34	33.00	35.10	36.20
35	34.00	36.10	37.20
36	35.00	37.10	38.20
37	36.00	38.10	39.20
38	37.00	39.10	40.20
39	38.00	40.10	41.20
40	39.00	41.10	42.20

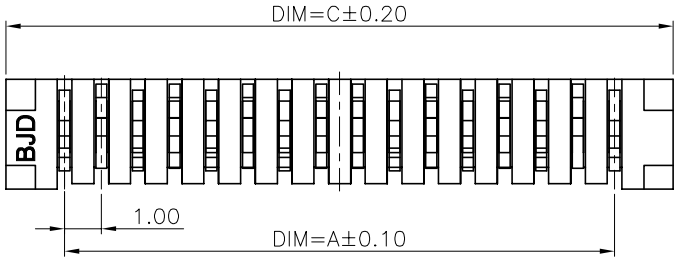

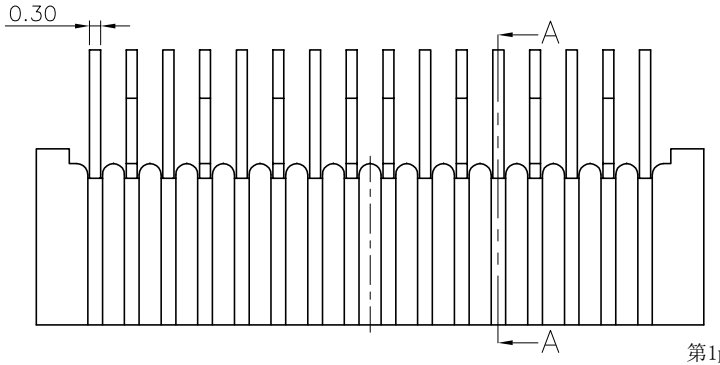

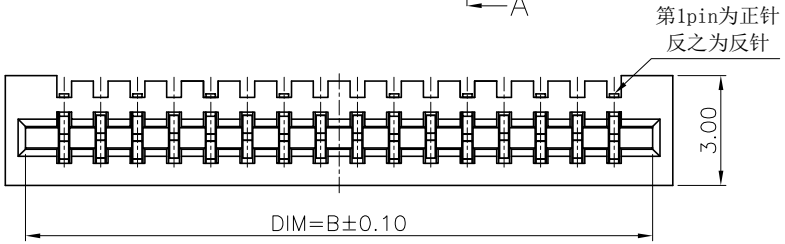

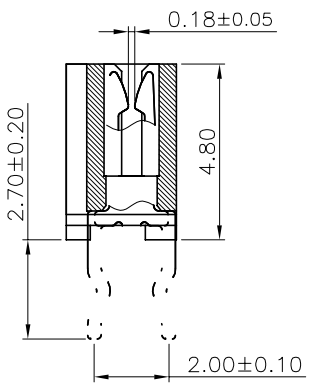

SECTION:A–A

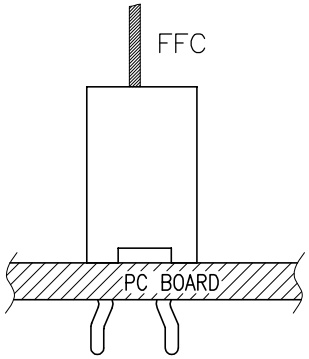

ASSEMBL LAYOUT
安装图

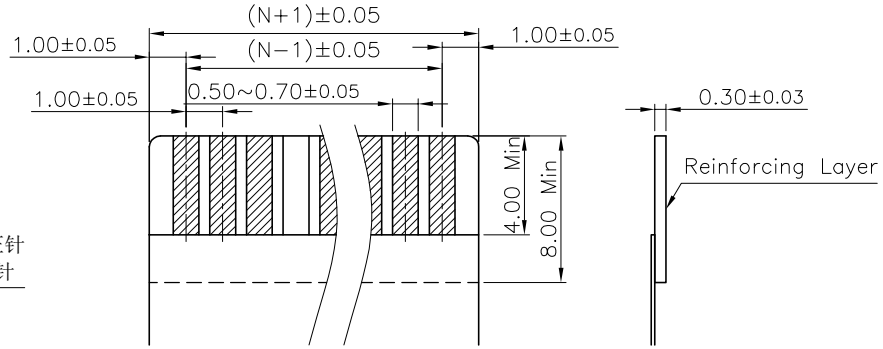

RECOMMENDED FFC/FPC DIMENSION

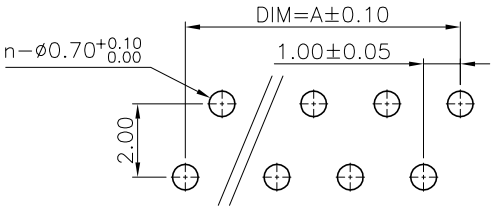

正针PCB
Positive needle PCB LAYOUT

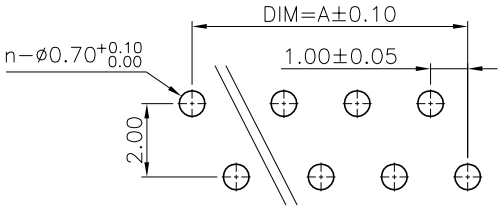

反针PCB
Versa needle PCB LAYOUT

NOTES:
1.HOUSING MATERIAL: HEAT RESISTANT PLASTIC UL94 V-0.
ACTUATOR MATERIAL: HEAT RESISTANT PLASTIC UL94 V-0.
2.TERMINAL MATERIAL: PHOSPHOR BRONZE.
2-1.PLATED WITH BRIGHT TIN(100%) 80u"~150u"
2-2.PLATED WITH MATTE TIN(100%) 80u"~150u"
2-3.PLATED WITH GOLD MORE THAN 1u.
3.PARTS NO: 11000X-X0XXX0

07:正脚本色
08:反脚本色
09:正脚黑色
10:反脚黑色

PIN数

1:管装
2:卷装
3:袋装
4:其他

1:雾锡
2:亮锡
3:镀金1u'
5:镀金3u'
6:半金锡

SER	REVISIONS	CHK	DATE

UNLESS OTHERWISE SPECIFIED TOLERANCES ARE
X.
X.X ±0.1
X.XX ±0.05
X.XXX
ANG. ±0°30'
UNIT MM

客户图 Drawings

北极大电子科技有限公司
BEIJIDA ELECTRONICS TECHNOLOGY CO. LIMITED

APPROVED	DATE	COMPUTER NO		
		11000X-X0XXX0		
CHECKED 陈天舒	DATE 2012-05-24	NAME FPC1.0-3代H3.0双面接触直插		
DRAWN 张运兴	DATE 2012-05-24	SIZE A4	SCALE 5:1	REV A