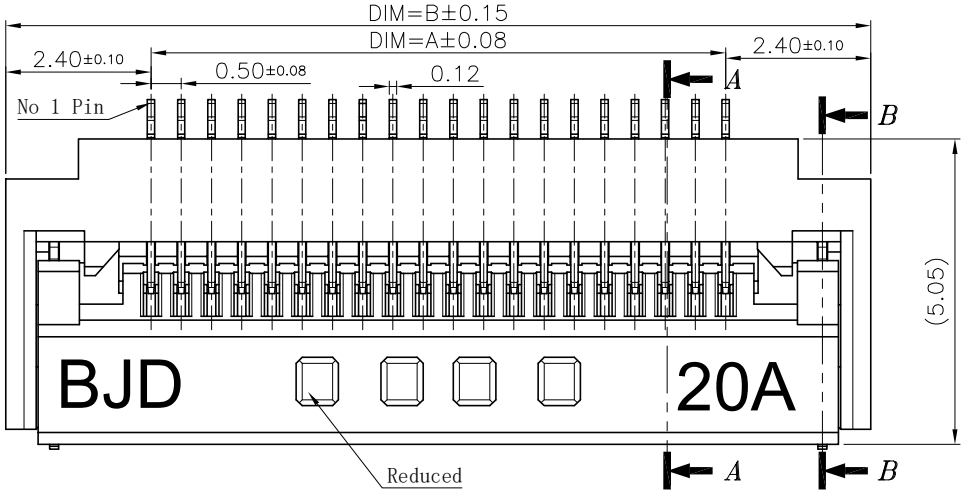

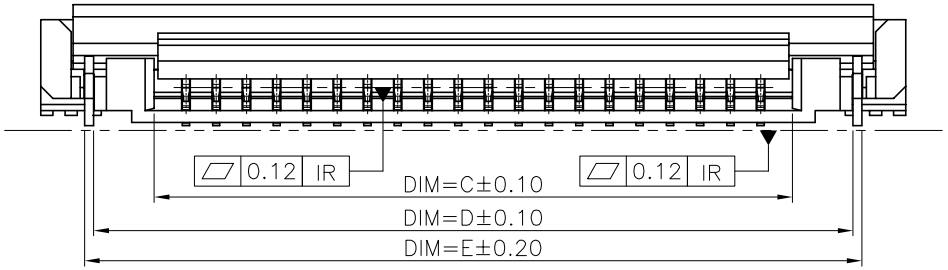

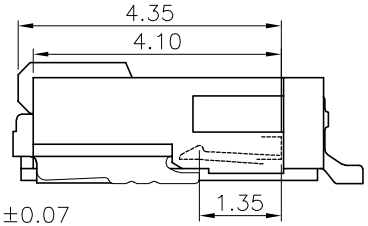

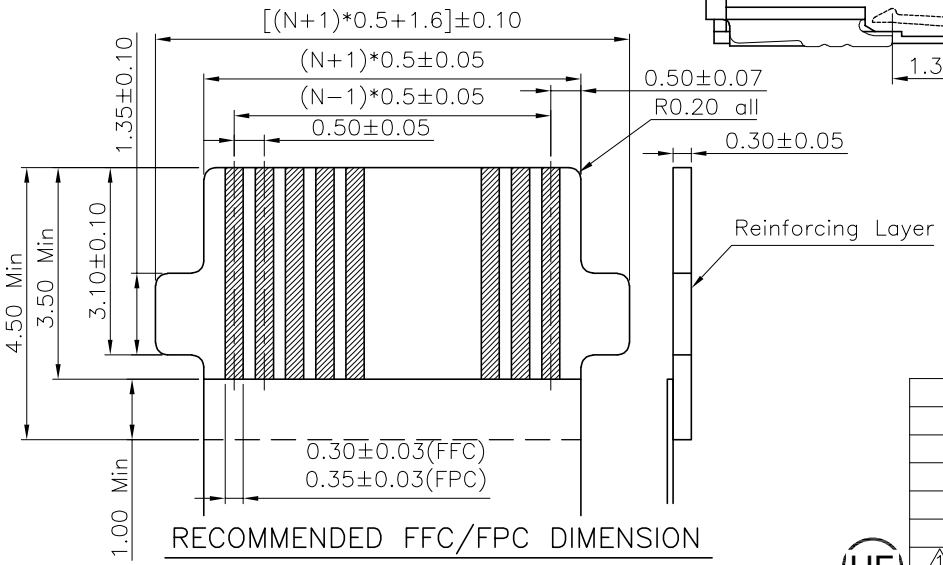

RECOMMENDED FFC/FPC DIMENSION

Notes:
1.Housing material: LCP GF 30%(UL94V−0),Color:Black.
2.Actuator material: LCP GF 30%(UL94V−0),Color:Black.
3.Terminal material: phosphor bronze.
The overall 1.25um~2.5um Nickel Plated.
contact and solder area gold plated 0.075um min.
4.Fitting nail material: phosphor bronze.
The overall 1.25um~2.5um Nickel Plated.
Plated with matte Tin(100%) 2um~3.75um.
5. ▲"Key characteristic; "△"important characteristic.
6.Recycled materials account for 20%
7.PART NO. Specifications: 101098−20XX50
8.CPK more than 1.67。

tape and reel packaging | Number of positions | plating

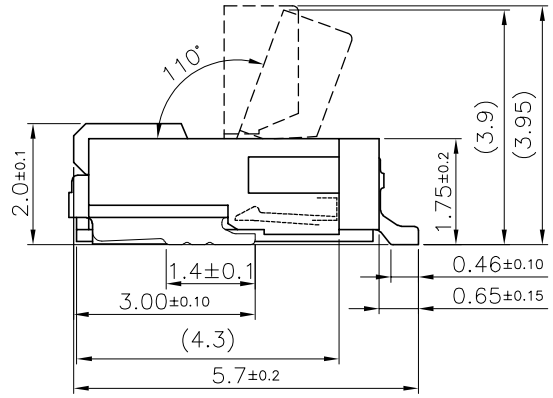

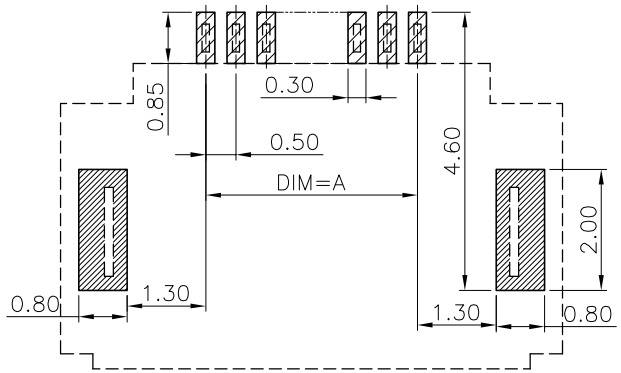

PCB LAYOUT

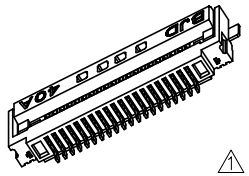

NO of Pin	DIM=A	DIM=B	DIM=C	DIM=D	DIM=E
4	1.50	6.30	2.55	4.55	4.85
5	2.00	6.80	3.05	5.05	5.35
6	2.50	7.30	3.55	5.55	5.85
7	3.00	7.80	4.05	6.05	6.35
8	3.50	8.30	4.55	6.55	6.85
9	4.00	8.80	5.05	7.05	7.35
10	4.50	9.30	5.55	7.55	7.85
11	5.00	9.80	6.05	8.05	8.35
12	5.50	10.30	6.55	8.55	8.85
13	6.00	10.80	7.05	9.05	9.35
14	6.50	11.30	7.55	9.55	9.85
15	7.00	11.80	8.05	10.05	10.35
16	7.50	12.30	8.55	10.55	10.85
17	8.00	12.80	9.05	11.05	11.35
18	8.50	13.30	9.55	11.55	11.85
19	9.00	13.80	10.05	12.05	12.35
20	9.50	14.30	10.55	12.55	12.85
21	10.00	14.80	11.05	13.05	13.35
22	10.50	15.30	11.55	13.55	13.85
23	11.00	15.80	12.05	14.05	14.35
24	11.50	16.30	12.55	14.55	14.85
25	12.00	16.80	13.05	15.05	15.35
26	12.50	17.30	13.55	15.55	15.85
27	13.00	17.80	14.05	16.05	16.35
28	13.50	18.30	14.55	16.55	16.85
29	14.00	18.80	15.05	17.05	17.35
30	14.50	19.30	15.55	17.55	17.85
31	15.00	19.80	16.05	18.05	18.35
32	15.50	20.30	16.55	18.55	18.85
33	16.00	20.80	17.05	19.05	19.35
34	16.50	21.30	17.55	19.55	19.85
35	17.00	21.80	18.05	20.05	20.35
36	17.50	22.30	18.55	20.55	20.85
37	18.00	22.80	19.05	21.05	21.35
38	18.50	23.30	19.55	21.55	21.85
39	19.00	23.80	20.05	22.05	22.35
40	19.50	24.30	20.55	22.55	22.85
41	20.00	24.80	21.05	23.05	23.35
42	20.50	25.30	21.55	23.55	23.85
43	21.00	25.80	22.05	24.05	24.35
44	21.50	26.30	22.55	24.55	24.85
45	22.00	26.80	23.05	25.05	25.35
46	22.50	27.30	23.55	25.55	25.85
47	23.00	27.80	24.05	26.05	26.35
48	23.50	28.30	24.55	26.55	26.85
49	24.00	28.80	25.05	27.05	27.35
50	24.50	29.30	25.55	27.55	27.85
51	25.00	29.80	26.05	28.05	28.35
52	25.50	30.30	26.55	28.55	28.85
53	26.00	30.80	27.05	29.05	29.35
54	26.50	31.30	27.55	29.55	29.85
55	27.00	31.80	28.05	30.05	30.35
56	27.50	32.30	28.55	30.55	30.85
57	28.00	32.80	29.05	31.05	31.35
58	28.50	33.30	29.55	31.55	31.85
59	29.00	33.80	30.05	32.05	32.35
60	29.50	34.30	30.55	32.55	32.85
61	30.00	34.80	31.05	33.05	33.35
62	30.50	35.30	31.55	33.55	33.85
63	31.00	35.80	32.05	34.05	34.35
64	31.50	36.30	32.55	34.55	34.85
65	32.00	36.80	33.05	35.05	35.35
66	32.50	37.30	33.55	35.55	35.85
67	33.00	37.80	34.05	36.05	36.35
68	33.50	38.30	34.55	36.55	36.85
69	34.00	38.80	35.05	37.05	37.35
70	34.50	39.30	35.55	37.55	37.85

SER	REVISIONS	CHK	DATE
1	Correct the data	chen	2022-12-02

UNLESS OTHERWISE SPECIFIED TOLERANCES ARE
X.
X.X ±0.20
X.XX ±0.10
X.XXX
ANG. ±0°30'
UNIT MM

客户图 Drawings

北极大电子科技有限公司
BEIJIDA ELECTRONICS TECHNOLOGY CO. LIMITED

APPROVED chentianshu	DATE 2021−12−01	COMPUTER NO 101098-20XX50-HF
CHECKED chentianshu	DATE 2021−12−01	NAME FPC0.5-26B Connector H2.0
DRAWN chen	DATE 2021−12−01	SIZE A4 / SCALE 8:1 / REV B